MCD55
Dehumidifier

Product description

The MCD (Munters Configurable Dehumidifier) combines traditional Munters strengths like efficiency and robustness with modern state of the art technology like modulating RH control and multiple language display.

Low energy consumption and reliability are important in todays processes. The new electronic control panel uses a touch display for a number of different energy saving opportunities including optional Variable Frequency Drive (VFD).

The Energy Recovery Purge (ERP) design is available as a standard option in order to save energy. The MCD55 is equipped with a number of alarm funtions to ensure total control of the dehumidification process. Frame casing and outer panels are made of corrosion resistant AluZink and coated in RAL 7035.

The MCD55 dehumidifier covers a wide range of needs by providing a variety of standard functions. The numerous options will allow pre- and post treatment by simply adding mechanical and electrical components.

The MCD55 can be supplied with 3 different reactivation alternatives - electrical, steam and gas. A service indicator activates when a preventative service is due, this is a standard feature. To make installation easier the process fan inlet has been designed to allow for different outlet positions.

The electrical equipment conforms to EN 60204 (IEC204) standards. The electrical system is designed for voltages up to 415V and an ambient temperature of up to 50°C. The MCD series of dehumidifiers conform to both harmonised European standards and technical specifications for CE marking.

Munters Rotor Technology

Munters desiccant rotors are highly effective moisture-adsorbing substances. An option for the MCD-series rotor technology is the ERP solutions reducing the energy consumption.

PRODUCT INFORMATION

MCD55

Features

- Efficient dehumidification between -20°C and 40°C
- Modulating humidity control incl. temp sensor
- Touch screen control
- Filter and rotor stop alarm as standard
- Energy saving options
- Service and running indicator alarm as external indicators

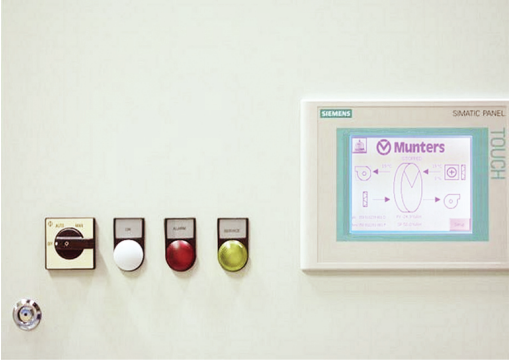

Energy Recovery Purge (ERP)

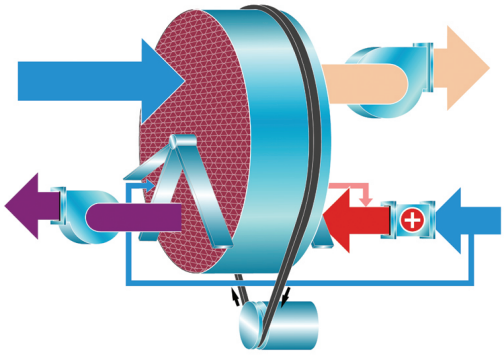

Munters

Model MCD55

Diagram measurements are for reference only.

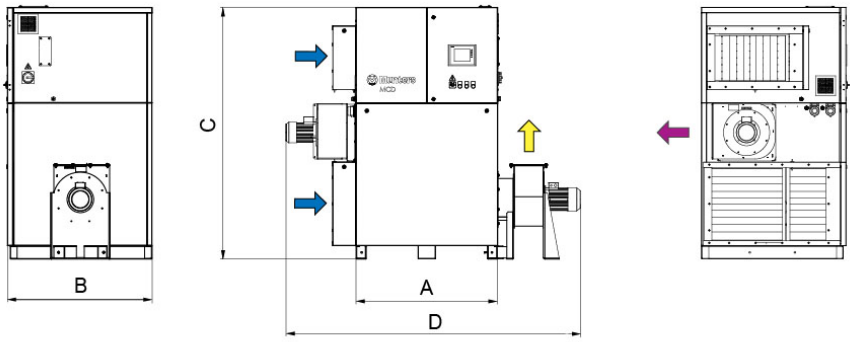

Height (C)	Dry air	Wet air	Weight	Width (A/D)	Depth (B)
1899	340x665	233x420	568	1068/2269	1091

Dehumidification Capacity

Approximate capacity in kg/h at different inlet process air relative humidity % RH

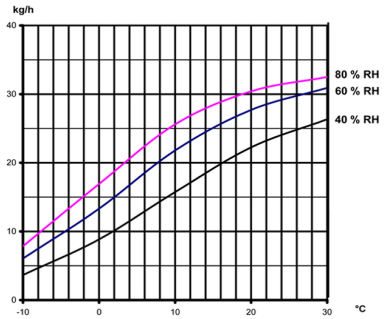

Process air temperature

Technical Specification

Process Air

Rated airflow (m³/h)	5500
Maximum static pressure (Pa)	300
Fan power (kW)	3

Reactivation air

Rated airflow (m³/h)	1080
Fan Power (kW)	0,75
Static Pressure at rated airflow (m³/h)	300

Total power, voltage and current (amps/phase)

Total power (kW) Electrical	40,1
Total power (kW) Steam/Gas	4,1
380V 3-50 Hz (A) Electrical	63,8
380V 3-50 Hz (A) Steam/Gas	9,1
400V 3-50 Hz (A) Electrical	60,6
400V 3-50 Hz (A) Steam/Gas	8,6
415V 3-50 Hz (A) Electrical	58,4
415V 3-50 Hz (A) Steam/Gas	8,3
Max steam working pressure (bar) (g)	7
Gas consumption (m³/h)	3,54
Natural gas pressure (mbar)	18-49
Max sulphur content (ppm) HPS Rotor	30
Steam consumption 3 bar (g/s)	16,87
Steam consumption 5 bar (g/s)	17,26
Total power with ERP,Electrical (kW)	40,1
Steam consumption with ERP 3 bar (g)	16,87
Gas consumption with ERP (m3/h)	3,54
Moisture removal 20°C, 60% (kg/24hr)	660
Steam consumption with ERP 5 Bar (g)	17,26

Miscellaneous Data

Operating temperature (°C)	-20-40
Max. noise level, all ducts connected (dbA)	74
IEC protective class (unit)	44
IEC protective class (electrical panel)	54
Filter class	G3
Motor winding insulation	F

Options

* Variable Frequency Drive (VFD) for process air fan
* Energy Recovery Purge (ERP)
* Pre-react-heater
* Insulated process air inlet
* Upgrade options for controller for pre- and post treatment
* Mirror handed
* Airflow indication
* Filters F5, F7 or G4/F7 combination
* Dewpoint sensor

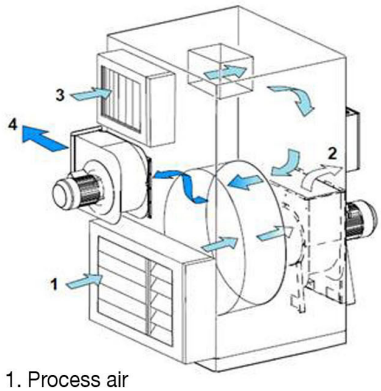

1. Process air
2. Dry air
3. Reactivation air
4. Wet air

www.munters.com

AUSTRIA
Munters GmbH
Tel +43 1 6164298-0
Fax +43 1 6164298-9298
Email:
luftentfeuchtung@munters.at

BELGIUM - Aartselaar address onl
Munters NV - DH Sales office - Aartselaar
Tel +32 3 458 24 34
Fax +32 3 458 24 33
Email:
sales@muntersnv.be

FINLAND
Munters OY
Tel +358 9 8386 030
Fax +358 9 8386 0336
Email:
laitemyynti@munters.fi

GERMANY
Munters GmbH
Tel +49 40-879690-0
Fax +49 40-879690-131
Email:
mgd@munters.de

ITALY
Munters Italy S.p.A
Tel +39 0183 521377
Fax +39 0183 521333
Email:
marketing@munters.it

HEADQUARTERS
Munters Europe AB
Tel +46 8 626 6300
Fax +46 8 626 6365
Email:
dehumidification@munters.se

BELGIUM
Munters NV
Tel +32 2 240 68 68
Fax +32 3 458 24 33
Email:
sales@muntersnv.be

DENMARK
Munters A/S
Tel +45 4495 3355
Fax +45 4495 3955
Email:
info@munters.dk

FRANCE
Munters France SAS
Tel +33 1 3411 5757
Fax +33 1 3411 5758
Email:
dh@munters .fr

INDIA
Munters India Humidity Control Pvt.Ltd
Tel +91 20 668 18 900
Fax +91 20 305 22 521
Email:
info@munters.in

Nederland (HC TN)
HC TN - Verkoop van Munters
Tel 0416 650075
Fax 0416-650586
Email:
hctn-info@hcgroep.com

Subject to change without notice

DH/MEA/PGB/-0110--11/05